Numerical simulations for impregnation of fiber preforms in composites manufacturing.

Xavier Gallez and Suresh G. Advani

Department of Mechanical Engineering/University of Delaware

Newark, DE 19716, U.S.A.

1 Introduction

Today's processing engineers are faced with the unique challenge to manufacture novel components based on advanced designs with new materials. Manufacturing methodologies have identified that to keep the product costs low and to maintain global competitiveness, one must reduce manufacturing process development time and cost, and increase manufacturing system flexibility and robustness. Also, fast and accurate numerical simulations of the manufacturing processes are a highly desirable tool aimed at providing substantial savings in development time and costs by optimizing the mold design, process and material paramaters before a mold is actually build, thereby reducing the usual trial and error startup processing cost.

Almost all engineers working with composites have converged on Liquid Molding also known as Resin Transfer Molding (RTM) as one of the most common fabrication methods with composite materials. RTM is a versatile and attractive process for high volume, high performance, and low cost manufacturing of polymer composites that is gaining prominence in almost all areas of the manufacturing industry. In this process, a fiber preform of reinforcing material is placed in the mold (see Figure 1). The mold is then closed, and a pre-polymer, mixed with a catalyst, is injected which impregnates the fiber preform and fills the heated mold where it cures to create a composite part. RTM owes its popularity to its net shape forming capabilities and the total control the designer has over the orientation of the reinforcing fibers, and thus the ability to tailor the properties of the final part to meet the requirements for the desired application. Nevertheless, alhough this process is very practical for the manufacturing of some polymer composite parts, it is difficult and expensive to use it to manufacture large parts and impregnate low permeability preforms. In these cases, a high injection pressure is required to assure that the impregnation is achieved before the resin starts to gel.

Recently, a variation of RTM has emerged, designed to overcome the above-mentioned difficulties. It is called the Resin Infusion Process, also popularly called as SCRIMP after the Seiman's patented process. This resin infusion process, featuring low styrene emissions and a one-side mold, takes the advantage of both RTM and vacuum bag molding (see Figure 2). The preform is first placed in an open mold that includes engraved microchannels, perpendicularly connected to a wider main channel serving as a resin gate. Alternatively, the network of microchannels can be replaced by a layer of highly porous material placed on top of the preform. A flexible plastic film is placed on top of the preform to close the mold. Air is drawn from the preform using a vacuum pump; this compresses the preform and draws the resin through it.

The particular characteristics of the resin infusion process have generated some new challenging issues concerning the numerical simulations. The deformation of the preform has to be accounted for and fully three dimensional simulations have to be performed in order to capture the physics of the flow at the interface of the preform and the microchannels. For those reasons, the algorithms based on a finite elements/control volume approach, used to perform two-dimensional simulations of RTM, are not suited. Some design issues that the simulations should help uncover are what should be the width of the microchannels, how far apart they should be placed, and where the resin gate and air vents should be located for optimal infusion time.

In the present work the current capabilities of the codes developed at the university of Delaware for the modelling of RTM are presented. Also, the foundations for the development of a new algorithm are laid down, with a view to simulating both RTM and SCRIMP within a reasonable computational time while accurately capturing the physics of the processes by a single computational tool.

2 Simulation of RTM process at the University of Delaware

2.1 LIMS

The established need for the science-base for the RTM technology has resulted in the development of process model of RTM based on mathematical equations. Advani et al. [1]-[4] have incorporated this process model in a numerical simulation called LIMS (Liquid Injection Molding Simulation) that predicts the mold filling pattern as the resin flows through the preform.

The flow model used in the simulations is Darcy's law for the flow of a generalized incompressible Newtonian fluid through an anisotropic porous medium. With this model, the continuity equation reduces to the Laplace equation for the fluid pressure. The pressure equation is solved numerically using a Finite-Element method. The linear system of equations that results from the approximations is solved for the pressures at the nodal points. The position of the flow front as the resin fills the mold is captured using a Control Volume approach. A node centered control volume along with an integration of fluxes along the sides of the control volume provides an accurate calculation of the flow rates. For the non-isothermal calculations, the energy balance equation is solved using an operator splitting approach coupled with a predictor-corrector method [17].

The mold may have multiple inserts, gates and vents. LIMS allows for the variation of the preform properties throughout the mold. Bruschke and Advani [5] have also included the effects of heat transfer between the mold, preform and the resin in their latest version of the simulation, LIMS 2.0. Liu and Advani (1994) have recently included gate control, venting, and dry spot formation in LIMS 3.0. LIMS 3.0 allows for one to monitor and predict the effect of mold wall temperature, resin temperature and the resin cure kinetics on the manufacturing process. The simulation also allows the viscosity of the resin to vary with temperature, cure rate and shear rate. This numerical tool is being used by many industries in the Consortium of the Center for Composite Materials to analyze the flow and heat transfer during the manufacturing with RTM. The numerical simulation has been verified with comparison of flow in an I-beam section of a paasenger van made bu Ford [6]. LIMS 3.0 allows the user to simulate the mold filling process and vary material and parameters such as the mold design, the gate locations, vent locations, injection pressures, flow rate, temperature of the tool, resin inlet temperature, resin rheology, resin cure kinetics, preform architecture in the mold, etc. This tool can predict the flow patterns in many complex geometries; examples are shown in Figures 3 and 4. Figure 3 is a load carrying beam of a Comanche helicopter that was discretized into 30,000 elements. The figure shows the flow fronts at various time steps. Notice the race tracking along the edges and corners.

2.2 Prediction of the permeability of the preform due to its deformation in the mold: the DRAPER program.

The liquid injection molding starts with reinforcement preforming. Various means have been used in order to produce the preforms. Some of them are stamping, drape forming, diaphragm forming and braiding. Preforms usually consist of layers of mats oriented in predetermined directions. If the geometry of the molded parts is simple, then the process only involves lay-ups of laminates. However, in most circumstances, the task to fabricate preform is more demanding. Given a box-shaped component for example, such geometry requires a combination of actions such as stretching or compression [7] simply to conform a flat workpiece into the desired shape in the preforming process. In addition to the factor of mold geometry, the requirement of various actions depends on the material properties used to fabricate the preform. For unidirectional preforms, interply slippage is the dominant action necessary to conform preform mats into arbitrary mold geometry. As for random mat (continuous strand mat) stretching as well as compression is needed. In the composite literature, two approaches have been reported on the theoretical modeling and computer implementation of the deformation prediction - the constitutive approach and the kinematic approach. The constitutive approach [8] endeavors to describe deformation modes through the continuum mechanics. The constitutive model is characterized by the behavior of the material and its forming mechanisms. The conservation of fiber length during forming has been adopted to reduce the problem to a kinematic analysis [9]-[11]. The no-slip assumption is often applied to situations where the contact of workpiece (i.e. preform) and tool preserves the spacing between tows. The kinematic approach becomes efficient where the material is bi-directional with inextensible fiber tows. The methodology by Bergsma [10] uses the unit cell model as the deformation mechanism to predict the orientation state in the forming of a deep-drawn box. Van West et al. [11] incorporated the kinematic model with CAD model the predict the onset of wrinkle formation.

As a consequence of preforming, the permeability of the preform and its volumic fraction are modified. These features can be simulated using DRAP, a code that can be coupled with LIMS. Figure 7 and 8 shows how the deformation caused by draping can change the flow patterns due to the reorientation of the fiber angles and fiber volume fraction.

2.3 Miscellaneous issues

Most simulations of liquid injection molding have been for isothermal two-dimensional filling of the mold [2], [12]-[14]. Although the parts that are currently being manufactured using resin transfer molding have complex three-dimensional geometry, they are usually thin-shell parts. Since, in such cases, the transverse or through-thickness flow is much less than the longitudinal or in-plane flow, it is a fair assumption that the flow is essentially two-dimensional. If the temperature changes during the filling process are small, then the isothermal assumption may be justified. However, there are several instances where the two-dimensional approximation is not valid. Some examples are:

- when the parts are no longer thin-shells, but thick composites,
- when there is a lay-up of preforms with different permeabilities, and
- when the temperature changes are not small.

In all these instances, the three-dimensionality of the flow becomes important. The non-isothermal effects may also be significant. Some researchers have investigated the non-isothermal filling problem [15]-[17] without solving the three-dimensional flow problem. Some others [18], [19] have studied the three-dimensional but isothermal problem. There is therefore a need for a three-dimensional non-isothermal simulation of the mold filling process. In our group, we have developed capabilities to simulate two-dimensional non-isothermal filling [23] and three-dimensional isothermal filling [21]. Figure 5 shows an example of such a simulation. We have also looked at various practical issues in the filling process including the formation of voids and the control of the flow-front movement using a simple sensor that detects the position of the flow front and opens or shuts gates depending on a specified control strategy [20], [22].

Finally, we have investigated race tracking effects, resulting because of an increase in permeability as the volumic fraction of the preform at the edges and corners of the mold is much lower due to preforming. Figure 6 shows the experimantal results and the simulation of the filling of a box where racetracking effects plays an important role [23]. Notice that the fiber preforms along the edges of the mold have lower fiber volume fraction and the fluid tends to race along these paths. In the simulation, higher permeability and lower volumic fraction elements are used to simulate these race tracking effects.

3 A finite elements / pseudo-concentration fonction approach.

3.1 Governing equations and boundary conditions

The impregnation of the preform by the resin is usually modeled as a pressure-driven flow of an incompressible fluid through a porous medium. Combining the equation for the conservation of mass with Darcy's law, the governing equation is written as:

$$\nabla \cdot \left(\frac{\underline{\underline{K}}}{\mu} \nabla p \right) = 0 \tag{1}$$

where $\underline{\underline{K}}$ is the permeability tensor of the preform, and μ the viscosity of the fluid. Since this equation is a second order elliptic equation, the pressure field or its derivative needs to be specified on all the surfaces delimiting the domain occupied by the fluid. These boundary conditions can be stated as follows (see fig.9):

- at the inlet gates:
  - prescribed pressure (essential boundary condition): $p = p_{in}$ or
  - prescribed flowrate (natural boundary conditions): $\underline{v}_n = \left(-\frac{\underline{\underline{K}}}{\mu} \cdot \nabla p \right) \cdot \underline{n} = \underline{v}_i$;
- at the wall of the mold: $\underline{v}_n = 0$;
- at the flow front: prescribed pressure: $p = p_0$.

Though equation (1) describes the physics of the flow within the domain occupied by the fluid, it doesn't specify what this domain is and new equations are to be introduced in order to track the fluid front. The present work relies on the use of a so-called *pseudo-concentration* function. The idea is to identify the fluid front by a particular value of a function advected by the flow. This function, denoted by $F(x, y, z, t)$, satisfies the pure advection equation:

$$\frac{DF}{Dt} = 0 \qquad or \qquad \frac{\partial F}{\partial t} + \underline{v} \cdot \nabla F = 0 \tag{2}$$

where $\frac{DF}{Dt}$ represents the material derivative. Since this is a hyperbolic equation, the boundary conditions on F are required only at the inlet gates. In the current work, these boundary conditions are set to be the time measured from the beginning of the mold filling. The fluid front coincides with the $F = 0$ surface. In the empty part of the mold, F is set to -1 (see Figure 9).

3.2 Numerical implementation

Both equations (1) and (2) are discretized using the Galerkin finite elements method. The pressure field and the pseudo-concentration function are approximated in space by nodal values, using trilinear shape functions over eight-noded brick elements. We obtain the discretized version of equations (1) and (2) in the form:

$$\underline{\underline{K}}_P \, \underline{P} = \underline{f} \tag{3}$$

$$\underline{\underline{M}}_F \, \dot{\underline{F}} + \underline{\underline{K}}_F \, \underline{F} = 0 \tag{4}$$

where $\underline{P}$ and $\underline{F}$ represents the nodal variables for the pressure and the pseudo-concentration function respectively. The stifness matrix $\underline{\underline{K}}_P$ and the load vector $\underline{f}$ are calculated as follows:

$$K_{P\,i,j} = \int_{\Omega} \nabla^T N_i \, \frac{\underline{\underline{K}}}{\mu} \, \nabla N_j \, d\Omega \tag{5}$$

$$f_i = \int_{\partial\Omega} \left(\frac{\underline{\underline{K}}}{\mu} \nabla p \right)^T \cdot \underline{n} \, N_i \, d\partial\Omega \tag{6}$$

The mass matrix $\underline{\underline{M}}_F$ and the stifness matrix $\underline{\underline{K}}_F$ for the pseudo-concentration function are given by:

$$M_{F\,i,j} = \int_{\Omega} N_i \, N_j \, d\Omega \tag{7}$$

$$K_{F\,i,j} = \int_{\Omega} N_i \, \underline{v} \cdot \nabla N_j \, d\Omega \tag{8}$$

Equation (4) is discretized in time using the Crank-Nicholson scheme:

$$\left(\underline{\underline{M}}_F + \frac{\Delta t}{2} \underline{\underline{K}}_F \right) \underline{F}^n + \left(-\underline{\underline{M}}_F + \frac{\Delta t}{2} \underline{\underline{K}}_F \right) \underline{F}^{n-1} = 0 \tag{9}$$

This ensures good results in terms of precision and stability. At each time-step, the system of equations (3) and (9) is solved iteratively for $\underline{P}^n$ and $\underline{F}^n$. The velocity field appearing in equation (8) is calculated implicitly at the integration points of the elements, using Darcy's law and the most recent value obtained for the pressure field.

4 Summary

we have developped a computer simulation called LIMS, that enables us to model the RTM filling process using a finite elements/control volume approach. Though this code has already proved its robustness in simulating two-dimensional non-isothermal and three-dimensional isothermal problems, the control volume approach used to track the fluid front requires a very fine discretization and becomes computationally inefficient as the number of elements increase.

A new approach is proposed for the modelling of both RTM and the Resin Infusion Process. It drops the control volume part and is based on a pure finite elements approach. This algorithm is not as sensitive to the number of elements and does not without compromise the accuracy of the results. Its advantages and capabilities will be demonstrated at the conference.

Acknowledgments

The financement support of the Army Research Office and the Army Research Laboratories is gratefully acknowledged.

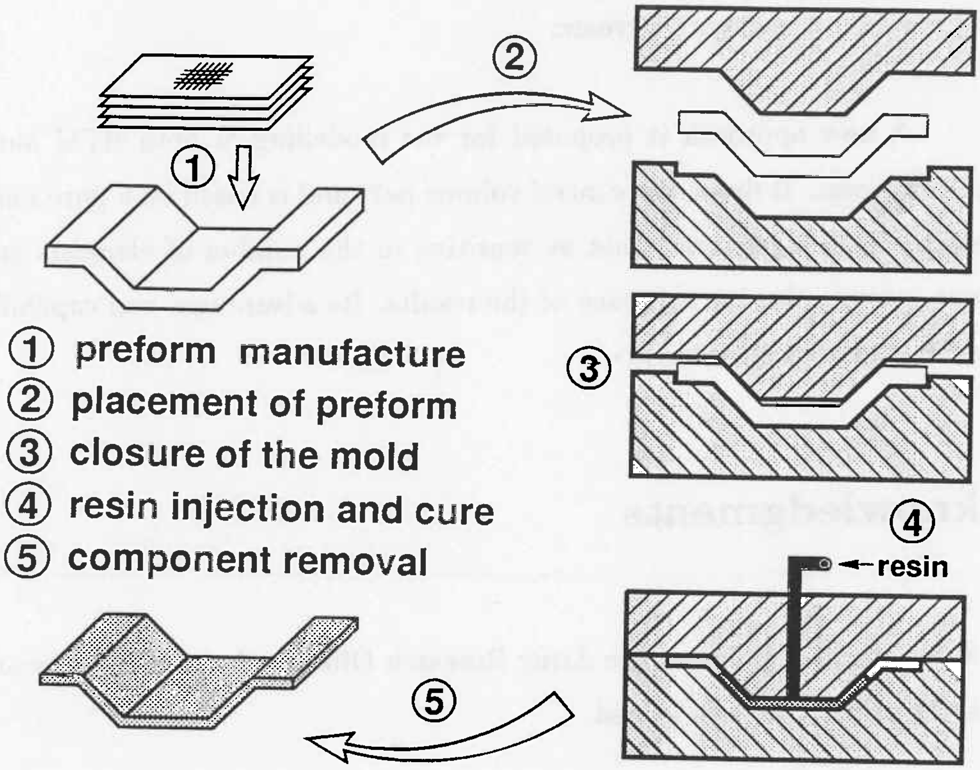

Figure 1: The RTM process.

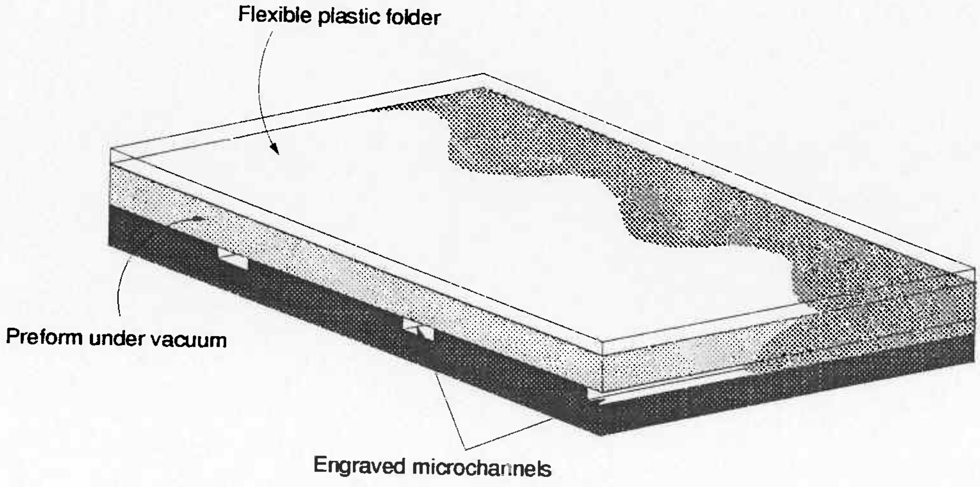

Figure 2: Resin Infusion Process under vacuum.

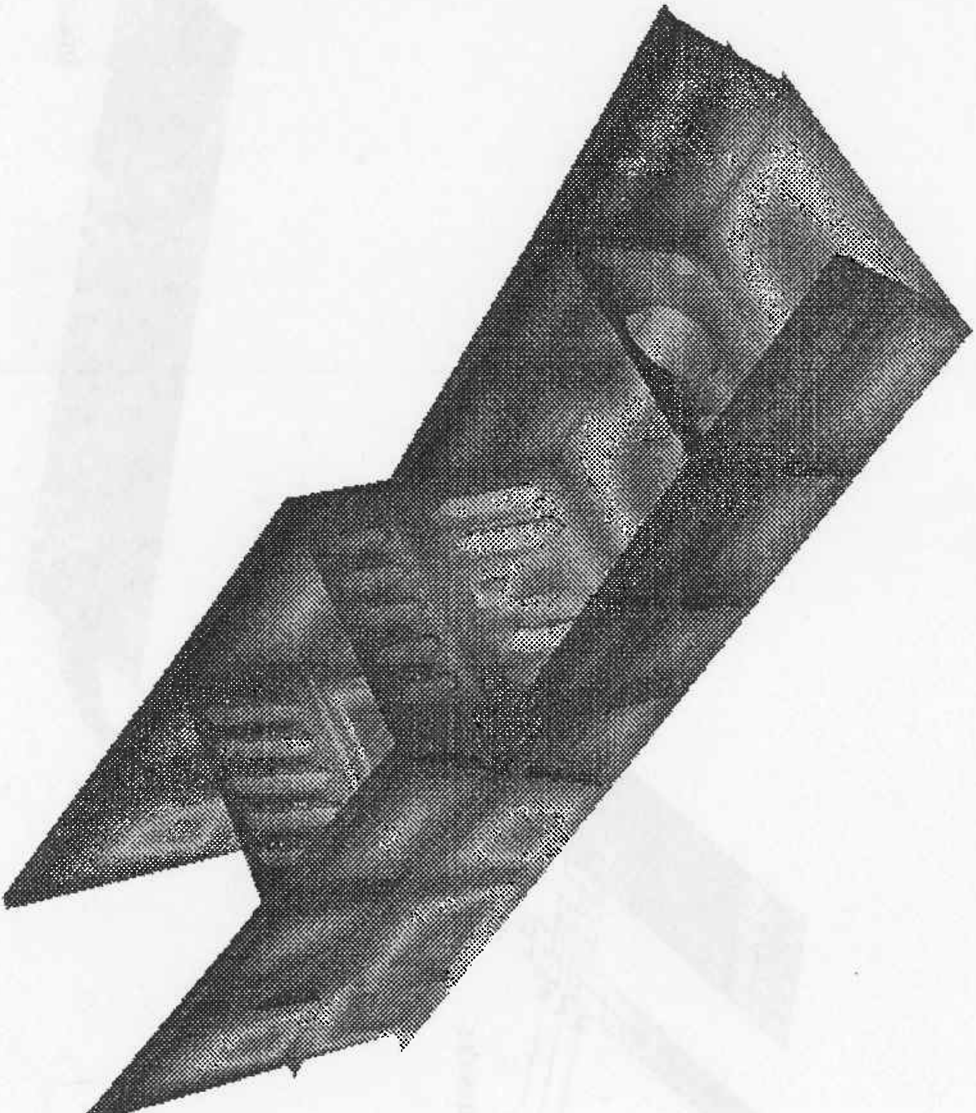

Figure 3: Mold Filling of a structural beam of the Comanche helicopter. The gray scale represent the position of the flow front at equidistant time steps.

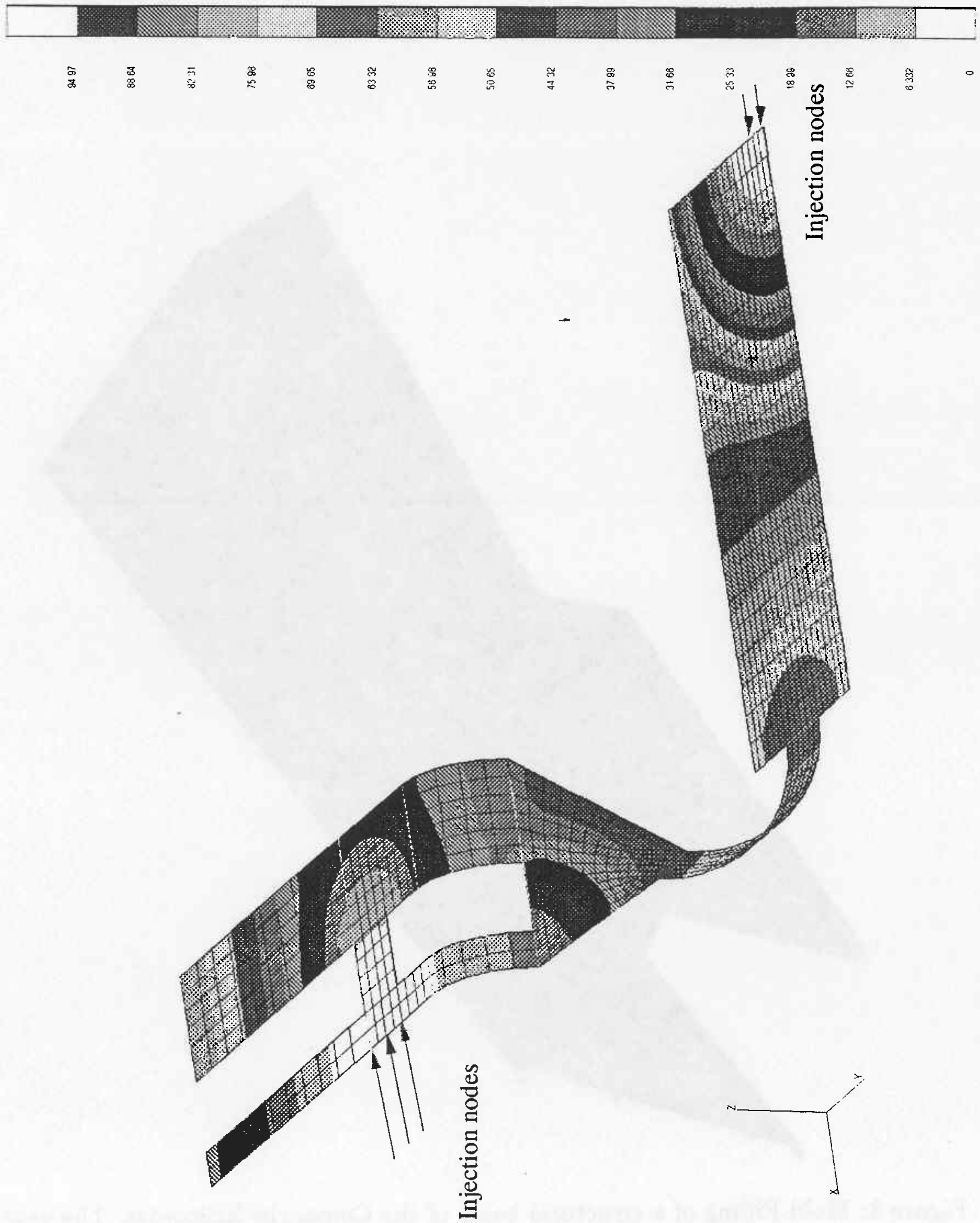

Figure 4: Mold filling of a complex geometry. The gray scale represent the position of the flow front at equidistant time steps.

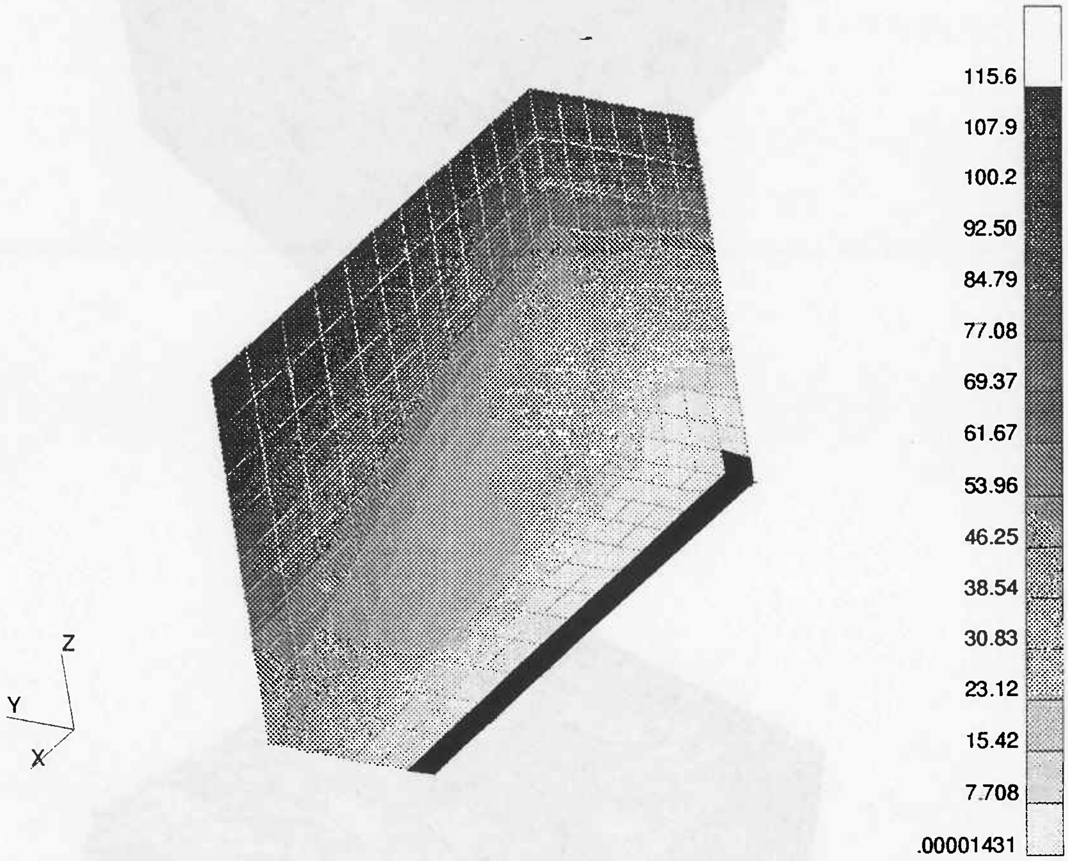

Figure 5: Three-dimensional mold filling simulation of the filling of a box. The hatched area represents elements with a higher permeability. The gray scale represent the position of the flow front at equidistant time steps.

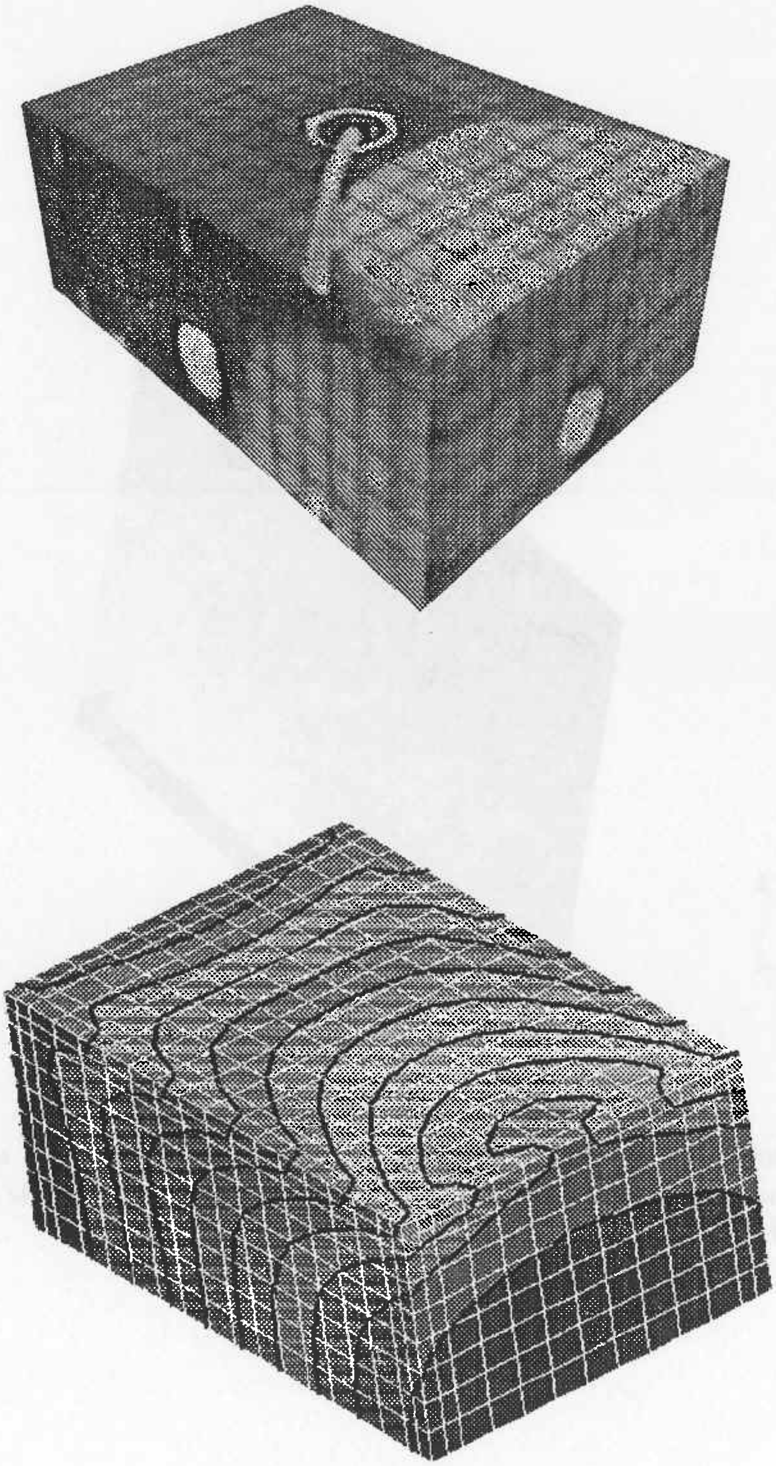

Figure 6: On the top is the visualization of race-tracking in a five-sided box. The injection location is the center of the left hidden face. The bottoms shows the simulated result with the flow front locations [23].

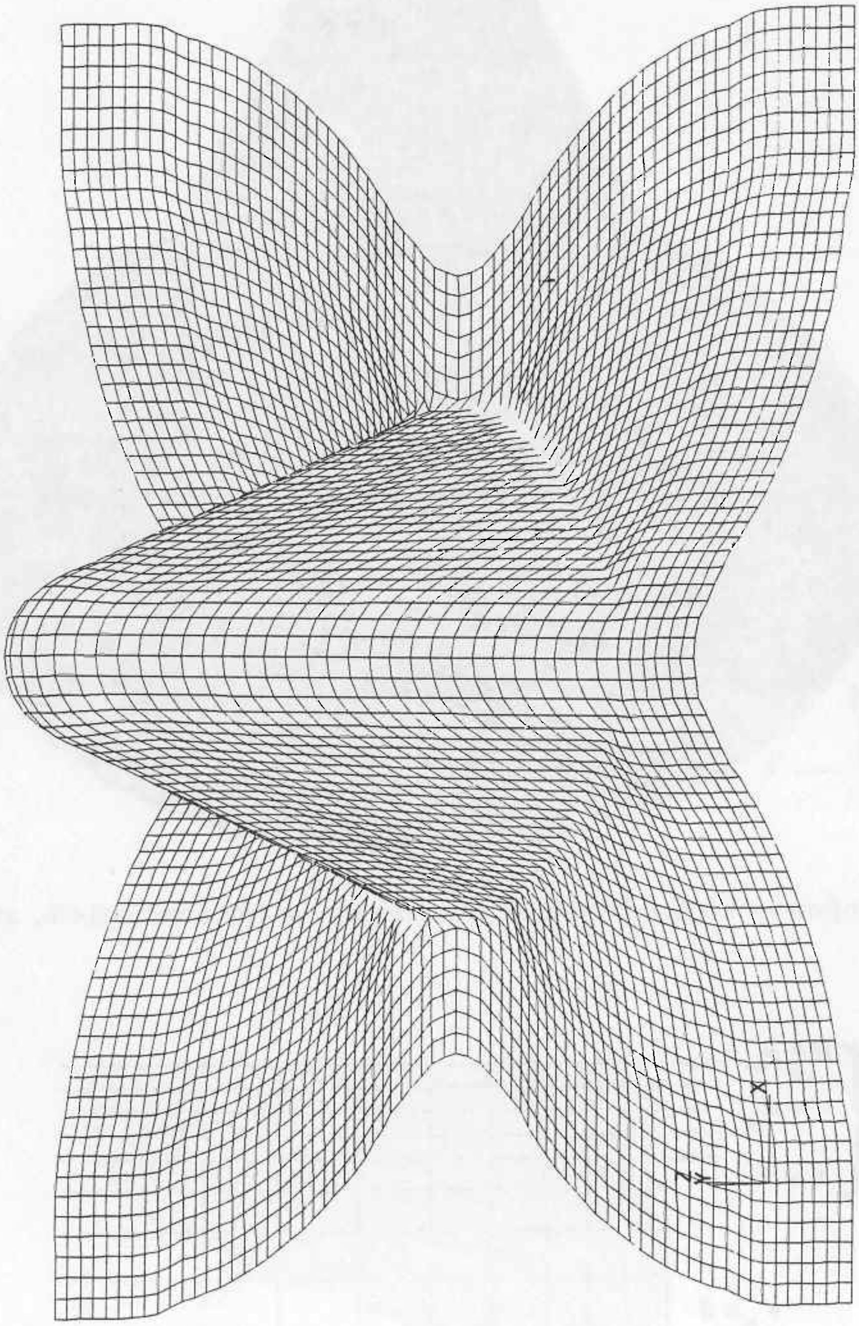

Figure 7: Change in fiber direction during draping of the preform on the tool surface as calculated by DRAP [24].

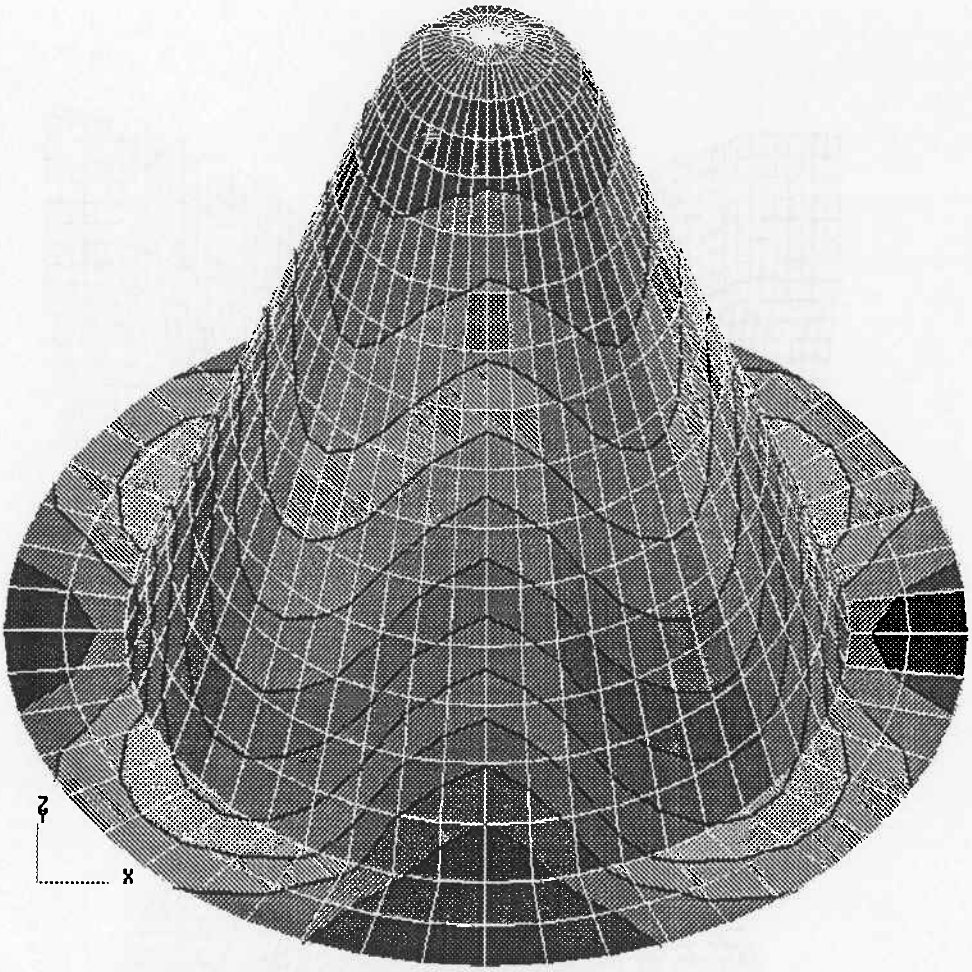

Figure 8: Influence of the draping of the preform on the flow pattern, as predicted by LIMS.

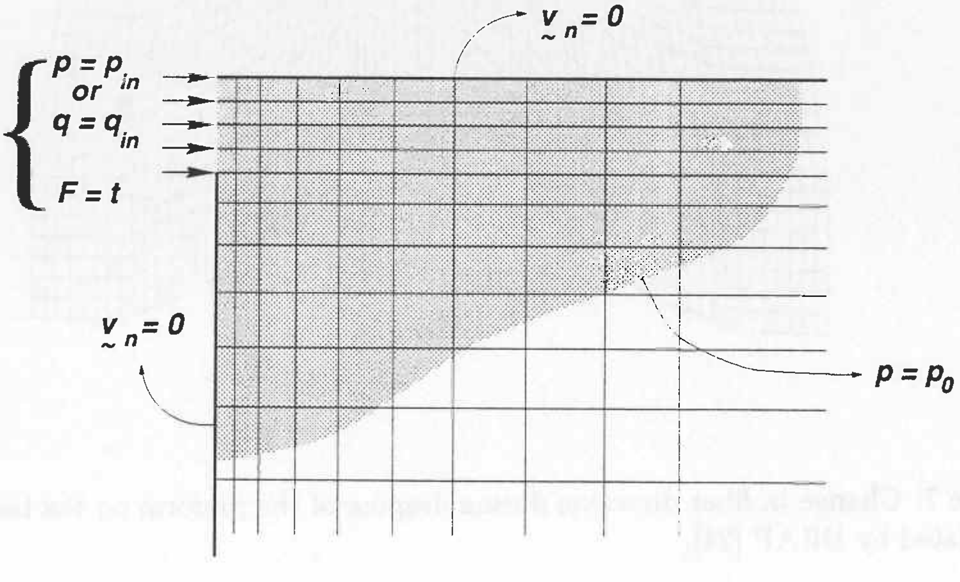

Figure 9: Boundary conditions used to perform the simulation.

References

[1] M. V. Bruschke and S. G. Advani, *RTM: Filling Simulation of Complex Three-Dimensional Shell-Like Structures*, SAMPE Quarterly, 23(1) pp. 2-11 (1991).

[2] M. V. Bruschke and S. G. Advani, *A Finite Element/Control Volume Approach to Mold Filling in Anisotropic Porous Media*, Polymer. Composites, 11. pp. 398-405 (1990).

[3] M.V. Bruschke, T. Luce and S. G. Advani, *Effective In-Plane Permeability of Multi-Layered RTM Preforms*, Proceedings of the American Society of Composites. pp. 103-112, (1992).

[4] Advani S. G. , M. V. Bruschke and R. Parnas, *Flow and Rheology in Polymer Composites Manufacturing*, Chapter 12: Resin Transfer Molding, pp. 465-516, Edited by Suresh G. Advani, Elsevier Publishers, Amsterdam (1994).

[5] M.V. Bruschke and S.G. Advani, *RTM Simulation: Non-Isothermal Flow and Cure Kinetics for Complex 3-D Shell-Like Structures*, SPE Tech. Pap., 39, pp. 834-840, (1993).

[6] M. V. Bruschke, Ph.D. (1992), *A Predictive Model for Permeability and Non-Isothermal Flow of Viscous and Shear–Thinning Fluids in Anisotropic Fibrous Media*, Department of Mechanical Engineering, University of Delaware.

[7] L. Fong, J. Y. Xu, and L. J. Lee, *Analysis of Fiber Mat Preforming in Liquid Composite Molding: Study of Deformation Modes and Reinforcement Characterization*, Polymer Composites (1994).

[8] C. M. O'Bradaigh, *Sheet forming of composite material*, Flow and Rheology in Polymer Composite Manufacturing, edited by S. G. Advani, pp. 517-569 (1994).

[9] T. Gutowski, D. Hoult, G. Dillon, and J. Gonzalez-Zugasti, *Differential geometry and the forming of aligned fiber composites*, Composites Manufacturing, Vol 2, 3/4, (1991).

[10] O. K. Bergsma and J. Huisman, Proc. CadComp, pp. 323-334 (1988).

[11] B. P. Van West, R. B. Pipes, and M. Keefe, J. Tex. Inst., Vol 81, 448 (1990).

[12] C. A. Fracchia, J. Castro and C. L. Tucker III, *A Finite-Element/Control-Volume Simulation of Resin Transfer Mold Filling*, Proceedings of the American Society for Composites Fourth Annual Technical Conference pp. 157-166 (1989).

[13] J. P. Coulter and S. I. Guceri, *Resin Impregnation During the Manufacturing of Composite Material Subject to Prescribed Injection Rate*, Journal of Reinforced Plastic Composites, Volume 7 (1988) pp. 200-220.

[14] J. A. Molnar, L. Trevino and L. J. Lee, *Liquid Flow in Molds with Prelocated Fiber Mats*, Polymer Composites, Volume 10, pp. 414-423 (1989).

[15] R. Lin, L. J. Lee and M. J. Liou, *Non-isothermal Mold Filling and Curing Simulation in Thin Cavities and Preplaced Fiber Mats*, International Polymer Processing, Volume 6 pages 356-369 (1991).

[16] S. Subbiah, D. L. Trafford and S. I. Guceri, *Non-isothermal Flow of Polymers into Two-dimensional, Thin Cavity Molds: A Numerical Grid Generation Approach*, International Journal of Heat and Mass Transfer, Vol. 32, 415-434 (1989).

[17] M. V. Bruschke and S. G. Advani, *A Numerical Approach to Model Non-isothermal, Viscous Flow with Free Surfaces Through Fibrous Media*, submitted to the International Journal of Numerical Methods in Fluids.

[18] W. B. Young, K. Rupel, K. Han, L.J. Lee and M.J. Liou, *Analysis of Resin Injection Molding in Molds with Preplaced Fiber Mats, II: Numerical Simulation and Experiments of Mold Filling*, Polymer Composites, Volume 12:1, pp. 30-38 (1991).

[19] F. R. Phelan, Jr., *Flow Simulation of the Resin-Transfer Molding Process*, Proceedings of the American Society of Composites Seventh Technical Conference pages 90-102 (1992).

[20] B. Liu and S. G. Advani, *Operator Splitting Scheme for 3-D Temperature Solution Based on 2-D Flow Approximation*, Computational Mechanics ,38, pp. 74-82(1995).

[21] R. R. Varma and S. G. Advani, *Three-Dimensional Finite Element Simulation of Mold Filling in Resin Transfer Molding*, to be presented at the American Society for Mechanical Engineers Winter Annual Meeting, November 1994.

[22] D. Liu , S. Bickerton and S. G. Advani, *Modeling and Simulation of RTM:Gate Control, Venting and Dry Spot Prediction*, Composites Part A, 27A , pp135-141 (1996).

[23] Y. de Parseval, S. Bickerton and S. G. Advani, *Role of local Permeability Variations in Resin Transfer Molding*, in *Thermal Problems*, Volume 9:2, pp. 1345-1348, Pineridge Press, 1995.

[24] *Role of local Permeability Variations in Resin Transfer Molding*, CCM report, 1995.